METRO Tow Trucks

INT-5

The Work Horse

The INT-5 is a real work horse. It will give you the power and performance you need for daily operations and ask for more. It is designed to be reliable and economical. The perfect model to start your fleet or add to it's capacity.

Standard features

- 1524 mm (60") Cab to Axle steel body
- 4 ton (8,800 lbs) winch
- Driver and passenger side manual controls
- Wheel scoops
- Fork receivers and 50 mm (2") frame forks
- Safety chains

Options

- Tunnel box 610 mm (24")
- Dollies
- Extra 4 ton (8,800 lbs) winch
- Rear anchors mounted on the under lift
- Remote control
- In cab controls
- Custom paint in 2 or more colors
- Extra frame forks
- Extra tools (snatch blocks, chains, straps, hooks)
- Aluminum body
- LED working lights
- LED strobe lights
- LED lights inside toolbox
- Installation services and extended warranty
- Tow operators education & training

Designed in Canada

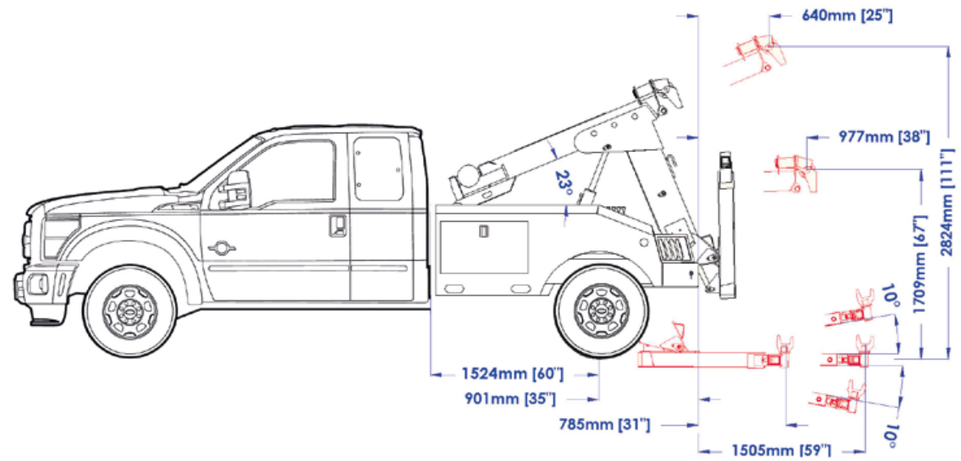

NOTE: Axle configuration is subject to local laws and regulations. All information in this document is for references only. Optional configuration might be shown.

Advantages

- 5 ton (11,000 lbs) actual capacity gives you the flexibility to pick up light cars and light duty trucks
- Our unique design shifts more weight to the front axle for better traction. Ideal for slippery conditions
- New look will turn heads!

Underlift Specifications

Retracted capacity on forks	**3.6 ton (8,000 lbs)**
Retracted distance to the forks	**785 mm (31")**
Extended capacity on forks	**2.4 ton (5,200 lbs)**
Extended distance to the forks	**1505 mm (59")**
Negative tilt angle	**-10°**
Tow Rating	**3.4 ton (7,500 lbs)**

Vehicle Recommendations

Front axle(s) weight (min)	**3 ton (6,600 lbs)**
Rear axle(s) weight (min)	**4.5 ton (9,900 lbs)**
Reccomended GVW	**5.2 ton (11,500 lbs) to 7 ton (15,500 lbs)**
Clear CA	**1524 mm (60")**

Boom Specifications

Retracted capacity (at 23°)	**5 ton (11,000 lbs)**
Extended capacity (at 23°)	**2.5 ton (5,500 lbs)**
Maximum Lift angle	**23°**
Maximum Hook Height	**2824 mm (111")**
Reach Past Tailboard	**997 mm (38")**

Winch Specifications

Quantity	**1 pcs**
Pulling force (on 1st layer)	**4 ton (8,800 lbs)**
Winch type	**Worm gear**
Cable length	**10 mm x 30 m (3/8" x 100')**

Notes:

- Some optional equipment may be shown.
- All ratings are based on structural and design factors only. Vehicle chassis capacity and capabilities can vary significantly, affecting the overall performance and rating of the unit. All chassis specifications are minimums, heavier specifications may be required depending on chassis and equipment weights. Please contact your nearest distributor for additional information.

Metro Tow Trucks Co. reserves the right to change, improve or modify products, which may change the specifications, models and features availability at any time without notice and without obligation. Please contact your nearest distributor for additional information.

© 2013 Metro Tow Trucks. All rights reserved. This material may not be reproduced, displayed, modified or distributed without the express prior written permission of the copyright holder. For permission, contact Sales@MetroTowTrucks.com